TEAR SHEET

Reed Small Chandelier

Item # TOB 5009HAB-L

Designer: Thomas O'Brien

O/A Height: 30"
Min. Custom Height: 20"
Width: 20"
Canopy: 5.25" Round
Finishes: AN, BZ, HAB, PN
Shade Treatments: L, NP
Shade Details: 4" x 5" x 6"
Socket: 3 - E12 Candelabra
Wattage: 3 - 60 B11
Weight: 5 Pounds
Note: Custom Height Available | Height Cannot Be Modified in the Field

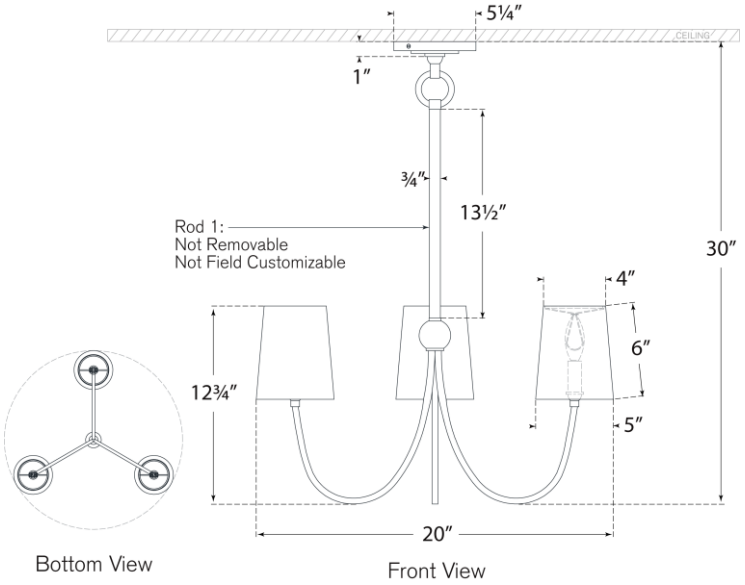

VISUAL COMFORT & CO.

DRY

4