TEAR SHEET

Strada Small Sconce

Item # KW 2070PN

Designer: Kelly Wearstler

Height: 19.25"
Width: 9"
Extension: 5.25"
Backplate: 4" Round
Finishes: AI, BSL, G, PN
Socket: 2 - E12 Candelabra
Wattage: 2 - 60 B11
Weight: 3 Pounds

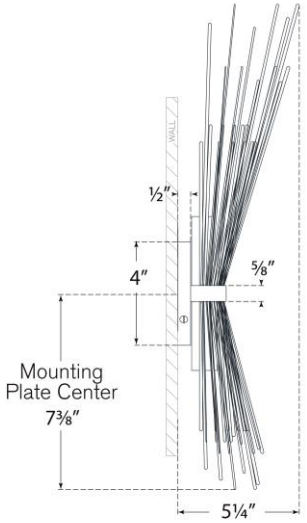

Side View

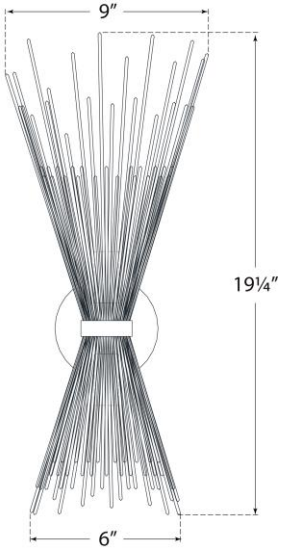

Front View

VISUAL COMFORT & CO.